W Series 2′

Spec sheet for WS-22, 12-bottle wine rack

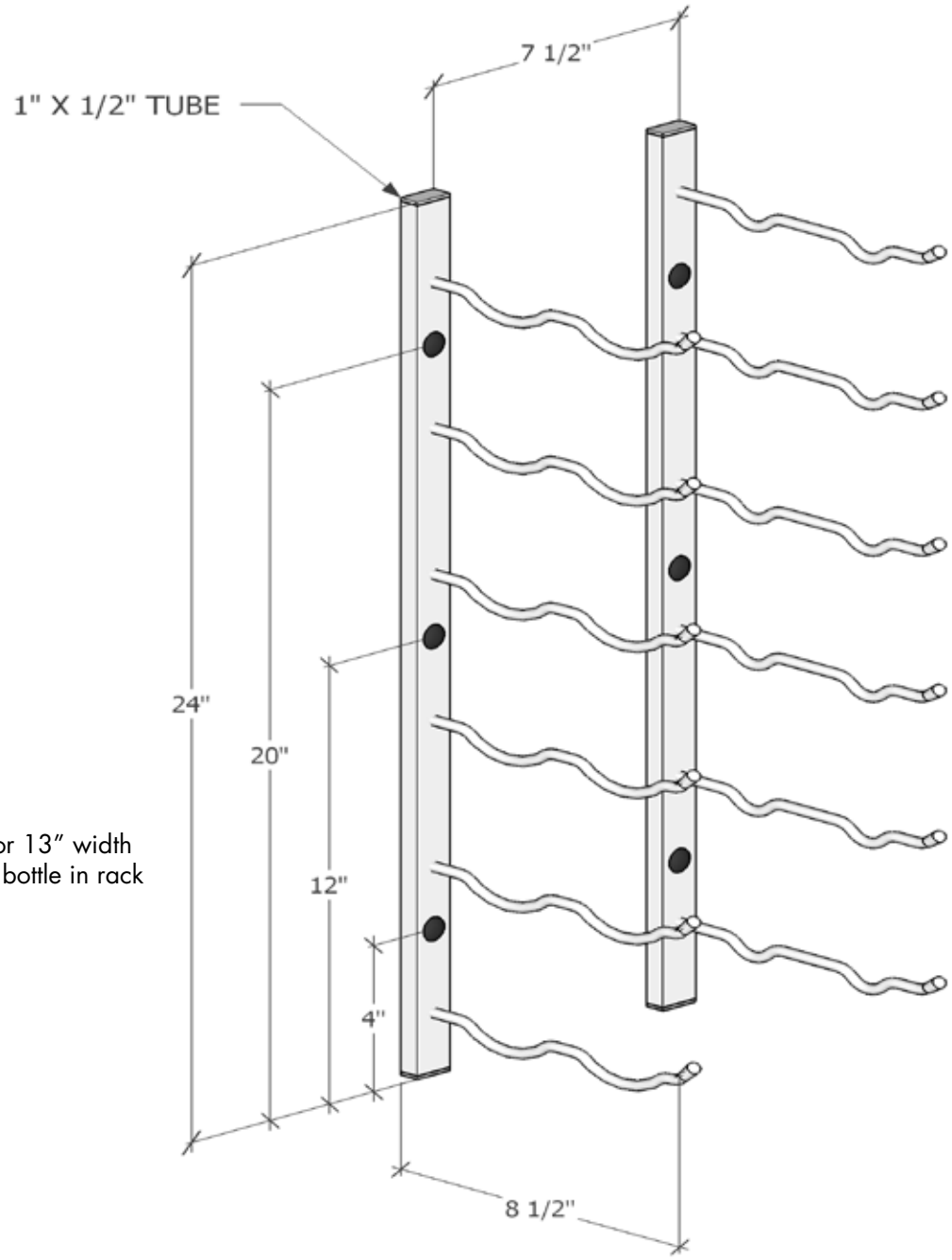

Account for 13″ width
with wine bottle in rack

VINTAGEVIEW®
MOVING WINE STORAGE FORWARD